Open hood G, junction element O, locking lever

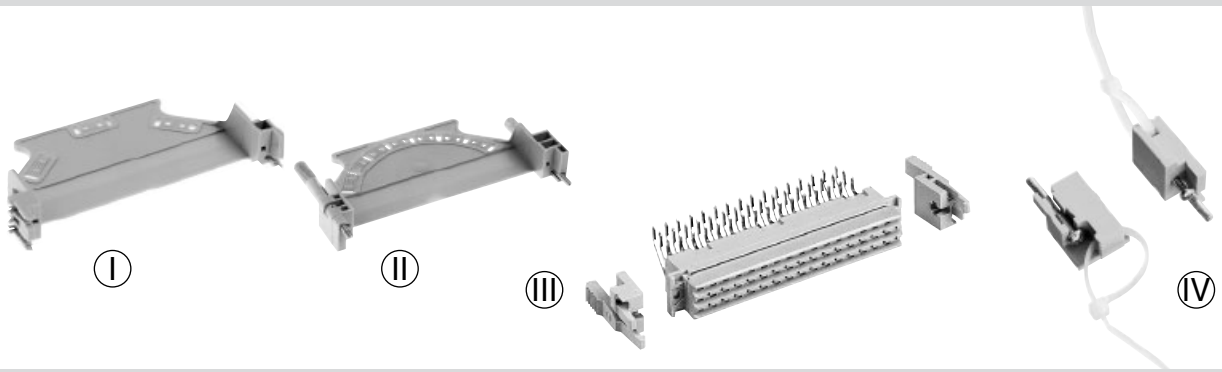

Identification	Part No.	Drawing	Dimensions in mm
Open hood G (I) for types E, F, H and MH, for applications A B C Supplied with: Open hood 1x Locking screw 2x (09 06 000 9958) Cable tie 1x Screw 2x	09 06 000 9957	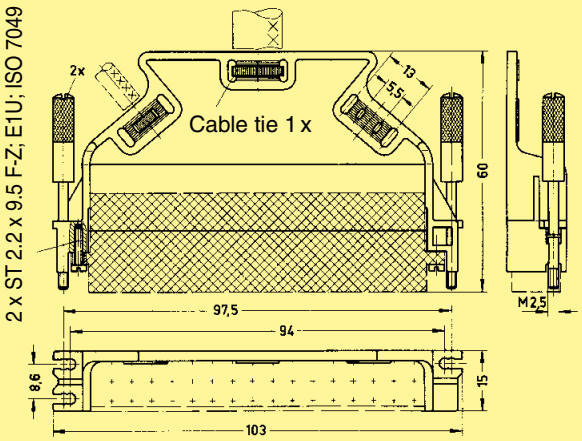	
Open hood G (II) for types E, F, H and MH, for application C Supplied with: Open hood 1x Pre-assembled, undetachable locking screw 2x Cable tie 1x Screw 2x	09 06 001 9939	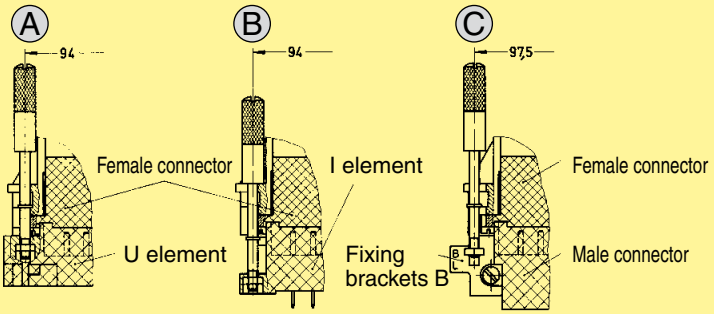	
Junction element O for type F IV Supplied with: Junction element 2x Cable tie 2x Screw 2x Screw M2.5 x 20 2x	09 06 000 9968	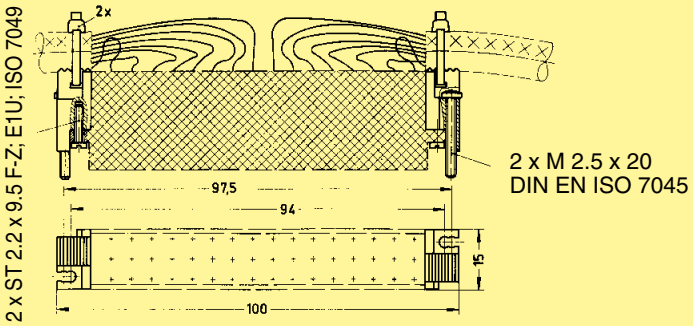	
Locking lever for type F, H and MH III	09 06 000 9930[1)] 09 06 000 9911[1)]	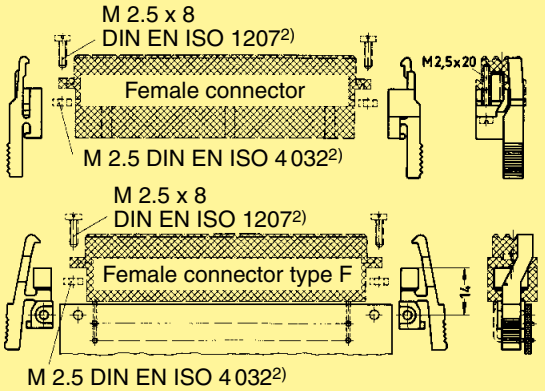	

[1)] Order 2 pieces for one female connector

[2)] nut and screw not supplied with locking levers

Railway classification NFF 16-101, Smoke index: F1, Flammability class: I2